KONAMI®

ORIGINAL VIDEO GAME

OPERATOR'S MANUAL

■ Dark Silhouette ■

SILENT SCOPE 2

© 2000 KONAMI AU RIGHTS RESERVED.

- Failure to operate the machine correctly could result in malfunction or accidents,so please read this manual carefully before commencing operation. Be sure to operate the machine as described in this manual.
- Keep this manual carefully so as to be ready for use when necessary.

P.N. 931400 GQ931

KONAMI®

TECH

About this product

Thank you for purchasing this KONAMI product This manual explains how to operate your game machine correctly and safely

***Failure to operate the machine correctly could result in malfunction or accidents, so please read this manual carefully before commencing operation. Be sure to operate the machine as described in this manual.**
***Keep this manual carefully so as to be ready for use when necessary.**
***If the machine fails to display or to get started, immediately turn OFF the main power switch, unplug the power cord from the receptacle and contact your nearest dealer.**

- **This manual covers the following models:**

- - 27" U/R

-The specifications of this product are subject to change without notice for reasons such as improving the performance.

-The contents of this game, its main devices and design are protected under each law concerning patent, copyright and other intellectual properties.

-Unauthorized reproduction of this document or any of its contents is strictly forbidden.

© 1999 KONAMI **ALL RIGHTS RESERVED.**

Driver software used under license of 3Dfx interactive

Contents

■ **Precautions for use** 2

1 Specifications 7

2 **Names of parts** 8

3 **How to play..** 9

4 Networking game machines and settings 5

4-I How to network game machines 10

5 Game settings

5-1 Checking the game performance.. 11
5-2 Setting and adjustment of game mode 12
5-3 Mode descriptions 13

6 Installation and assembly

6-1 Installing the step covers 25
6-2 Installing the title unit 26
6-3 Power unit 27
6-4 Separating the machine.. 28

7 Maintenance

7-1 Replacing the fluorescent light.. 26
7-2 Replacing the start button 30
7-3 Replacing the rifle unit.. 32
7-4 Replacing the rifle unit microswitch 33
7-5 Replacing the scope 34
7-6 Replacing the rifle unit potentiometers 36
7-7 Removing the PCB unit.. 39
7-6 Resetting the circuit protector 40
7-9 Adjusting the monitor 41
7-10 Adjusting the brightness on the scope LCD screen 41
7-11 Troubleshooting 42

8 **Annex**

8-1 Exploded views 46
8-2 Wiring diagram 51

Precautions for use

The following safety precautions are used throughout this manual. They must be strictly followed to protect those who Install, use or maintain this product as well as to prevent other people's injuries and property damage.

Be sure to read the following

-The following icons show the degree of danger and damage caused when the product is used improperly with the suggestions disregarded.

WARNING	Indicates a situation where disregarding the suggestions could result in death or serious injury.
CAUTION	Indicates a situation where disregarding the suggestions could result in injury or product damage.

•The following graphic icons describe the types of precautions to be followed.

A	**Indicates a matter of which care should be taken.**
	Indicates a matter which is forbidden.
Ind wit u t	**Indicates a matter which should be performed** f a i l .

-Definitions of qualified in-shop maintenance persons and industry specialists who handle this product.

•In this instruction manual, some procedures require a qualified in-shop maintenance person or industry specialist. For such instructions, a qualified person must perform the jobs.
·Otherwise an electric shock, machine trouble, or serious accident may result.
·Replacing the machine parts, inspecting and maintaining the machines, and troubleshooting must be assigned only to a qualified in-shop maintenance person or industry specialist. This booklet gives instructions that hazardous jobs in particular must be handled by an industry specialist. Qualified in-shop maintenance persons and industry specialist are defined as follows.

Qualified in-shop maintenance persons
·A qualified in-shop maintenance person must have experience in maintaining amusement machines, money changers and the like. Under the supervision of an amusement machines shop owner or manager, he or she routinely assembles, installs, inspects and maintains the amusement machines, or replaces their component units and consumable parts, in the amusement machines workshop and/or shop

Jobs handled by qualified in-shop maintenance persons
'Assembling, installing, inspecting and maintaining amusement machines and money changers, and replacing their component units and consumable parts.

Industry specialist
·An industry specialist must be engaged in designing, manufacturing. inspecting and servicing amusement machines. Or he or she must have an education in electrical, electronic and mechanical engineering, and routinely maintain and repair amusement machines.

Jobs handled by industry specialist
·Assembling and installing amusement machines and money changers, and repairing and adjusting their electrical, electronic and mechanical component parts.

WARNING

- Be sure to consult your nearest dealer when setting up, moving or transporting this product.
  - This product should not be set up, moved or transported by anyone other than an industry specialist Doing so could result in injury or product damage.
  - When installing this product, set the 8 adjusters stable on the floor and make sure that the product is installed stably in a horizontal position. Unstable installation may result in injury or accident.
  - When installing this product, use care not to apply undue force to opening and closing parts and other movable parts. Otherwise, injury or accident may result, or the product may be damaged.

- This product is an indoor game machine. Never set up the game machine outside.
  Setting up this product outside could result in accidents or equipment failure.

- Do not set up the game machine near emergency exits.
  - Doing so could block exits in time of emergency and could result in death or serious injury.

- Do not set up the game machine.
  - Otherwise an accident or malfunction may result.
    - In a place exposed to rain or moisture.
    - In a place exposed to direct sunlight.
    - In a place exposed to direct heat from air-conditioning and heating equipment, etc..
    - Near hazardous flammable substances such as thinner and kerosene.
    - On an inclined or uneven floor.
    - Near *tire* extinguishing equipment.
    - In a place exposed to strong vibration.
    - In a place exposed to excessive dust.
    - Near equipment generating strong magnetism or electric waves.

- Do not place containers holding chemicals or water on or near the game machine.
  - Electrical shock or damage could be caused by water or foreign matter entering the inside of the machine.

- Do not place objects near the ventilating holes.
  - Doing so could cause the internal temperature to rise excessively, resulting in fire or equipment failure.

- Do *not* bend the power cord by force or place heavy objects on it.
  - Doing so could result in electric leakage or fire.

- Never plug or unplug the power cord with wet hands.
  - Doing so could result in electrical shock.

- Never unplug by pulling the power cord.
  - Doing so could damage the cord, resulting in electric leakage or fire.

Installation

CAUTION

-Be sure to use indoor wiring within the specified voltage range. For extension cord, use indoor wiring of the specified rating or more.
·Failure to do so could result in fire or equipment failure.

•Be sure to use the attached power cord.
·Otherwise a fire or machine damage may result

•Never plug more than one cord at a time in the electrical receptacle.
·Doing so could result in fire or electrical shock.

•Do not lay the power cord where people walk through. You may tread on or stumble over them.
·You may stumble and get Injured. or damage the power cord.

*Be sure to ground this product.
·Otherwise an electric shock or machine damage may be caused.

•Do not apply a strong force while moving the machine.
·Otherwise, it may result in an accident or damage of the units.

•Do not hold the rifle unit when moving the machine.
·Otherwise, it may result in an injury or damage to this product.

-Clearance of 100 mm (3.94in) or more should be created between the game machine and walls.
-Otherwise the machine (s) cannot be ventilated well, resulting in malfunction.

•Do not change the DIP switch setting of this product to other than factory setting.
·Otherwise, the game can not operate properly.

WARNING

-If there is any abnormality such as smoke, bad smell or abnormal noise being emitted from the machine, immediately turn OFF the main power switch and unplug the power cord from the receptacle to stop operating it.
·Using the machine in abnormal conditions could result in fire or accidents.

In case of abnormality

1 Turn OFF the main power switch.
2 Unplug the power cord from the receptacle.
3 Contact your nearest dealer.

•Do not leave the power cord plugged improperly or covered with dust.
·Doing so could result in electrical shock or fire, so inspect the power cord periodically.

CAUTION

•Do not use this product anywhere other than industrial areas.
Use in a residential area or an area next to a residential area could affect signal reception of radios, television sets, telephones, etc..

*The following users should not play the game.
·Doing so could cause accidents or illness

·Those under the influence of alcohol.	·Those with drink and / or food in hand
·Those suffering from or being treated for arm. wrist or back ailments.	

•Do not give impact to the glass cover.
·Otherwise, it may result in an unexpected accident or injury.

•Do not plug or unplug the power cord with wet hands.
·Doing so could result in electrical shock.

•In handling the power cord, follow the instructions below.
·Otherwise an electric leak, fire or electric shock may result. Normal communication play may also be impossible.

·Do not damage the power cord.	·Do not modify the power cord.
·Do not bend the power cord excessively.	·Do not twist the power cord.
·Do not heat the power cord.	·Do not pull the power cord.
·Do not bind the power cord	·Do not tread on the power cord.
·Do not sandwich the power cord.	·Do not drive a nail into the power cord.

•If the power cord or power plug becomes damaged, stop using the machine immediately and ask your nearest dealer to replace the parts.
·Using a damaged power cord or power plug could result in fire or electrical shock.

Inspection and cleaning

WARNING

•Be sure to turn OFF the main power switch and unplug the power cord from the receptacle before inspecting or cleaning the machine.
·Failure to do so could result in electrical shock.

•When replacing parts, be sure to use parts of the correct specifications. Never use parts other than the specified ones.
-Using improper parts could result in fire or equipment failure.

•There are high-voltage parts inside the product. Other persons than qualified industry specialist should not open the back door and side door. When the back door and side door is opened, pay due attention not to touch the inside unnecessarily.
-Otherwise an accident or electric shock may result.

*Before opening the back door and side door, be sure to turn OFF the main power switch and unplug the power cord from the receptacle.
·Otherwise, there may arise a danger of accident or electric shock.

Strictly refrain from disassembly and repair of parts which are not indicated in this manual, as well as settings and remodelling.
·Otherwise, a fire, malfunction or trouble may result.
In case of any trouble, ask your nearest dealer for repairs and other services.
KONAMI will not assume any responsibility for damage to the product attributable to disassembly and repair of parts which are not indicated in this manual, as well as settings and remodelling.

•Gently open the fluorescent light cover.
-Otherwise, the fluorescent light or other part may get broken.

•To clean the game machine, wipe it with a soft cloth dampened in a neutral detergent and wrung out.
·Using thinner or other organic solvent or alcohol may decompose the material.
·Electrical shock or equipment failure could be caused by water entering the inside of the machine.

Moving and transportation

CAUTION

•The game machine contains parts such as the monitor, electronic components and precision components which are sensitive to vibration and impacts. Great care therefore should be taken when moving and transporting the game machine. Be sure not to let the machine tip over.

-Before moving the machine, be sure to turn OFF the main power switch, unplug the power cord from the receptacle and remove the power cord from the machine.
·Stepping on or tripping over the power cord may result in an accident or damage the machine.

*Before moving the machine, be sure to fully lift the adjusters and move it on the casters.
·Otherwise, an accident, breakage or trouble may result

•Do not apply a strong force when moving the machine.
·Otherwise, it may result in an accident or breakage of the units.

•Do not hold the rifle unit when moving the machine.
·Otherwise, it may result in an injury or damage to this product.

-When moving the monitor unit, be sure to push it along sideways (to the right or left). When moving it on a slope or getting it over a step, be sure to use the buddy system.
·Otherwise, the unit may turn over. resulting in an accident or damage.

•When moving the machine, take care that no undue force is applied to the opening I closing sections or moving sections of the machine.
·Otherwise injury, accidents or machine damage may result.

·Disposal

WARNING

-When disposing of the rifle unit of this product, do not leave it with the scope exposed. Doing so could result in fire due to direct sunlight, etc..

PRECAUTION IN HANDLING

-When setting up, inspecting, maintaining. moving or transporting this product, follow the procedures and instructions set forth in this manual and perform such work safely.

•Do not remove labels of "WARNING", "CAUTION", etc attached to the product.

•Do not set up, handle, inspect, maintain, move or transport this product under conditions equivalent to the condition of "WARNING" or 'CAUTION" specified in this manual.

•If a new owner is to have this product as a result of transfer. etc., be sure to give this manual to the new owner.

1 Specifications

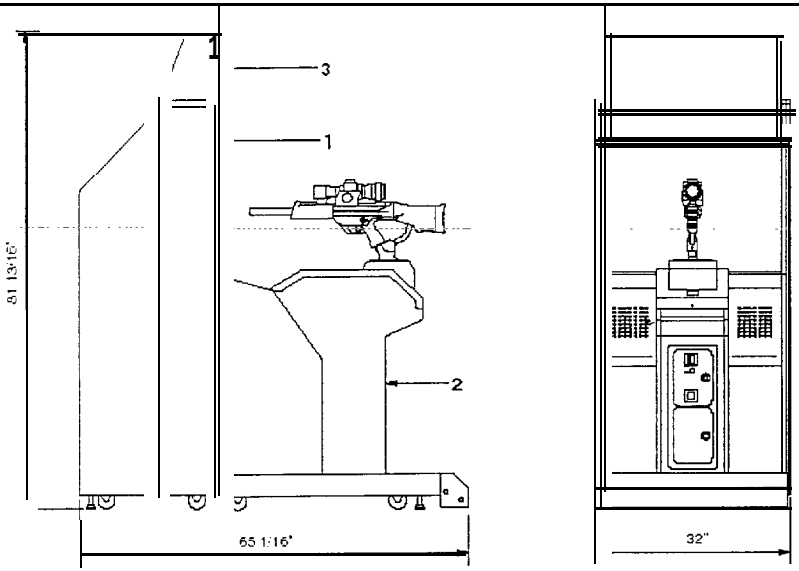

Specifications

Dimensions	Refer to the figure above : (in.)
Weight	Approx.249 kg (549 lb) 1 Monitor unit: Approx. 127 kg (280.0 lb) 3 Title unit : Approx. 12 kg (26.5 lb 2 Control unit : Approx. 110 kg (242.5lb)
Rated power consumption	115VAC/7A 47-63 hz
Monitor	29-inch CRT(Scope: 2-inch LCD)
Coin Door	Bill Acceptor-Mars Series 2000 AE2400 ready (not attached)
Service condition	Temperature 10 to 35½C (50 to 95½F), Humidity 20 to 80%(No dewing is allowed.
Attachments	·Instruction manual This manual ·Keys for coin door 2 ·Keys for maintenance 2 ·AC power cord 1 ·Title unit 1 ·Title unit mounting screw 4 ·T-20 Allen wrench (for servicing the scope) 1 ·Network cable 1

•If any part is defective or not found, contact your nearest dealer.

•The specifications of this product are subject to change without notice for reasons such as improving the performance.

2 Names of parts

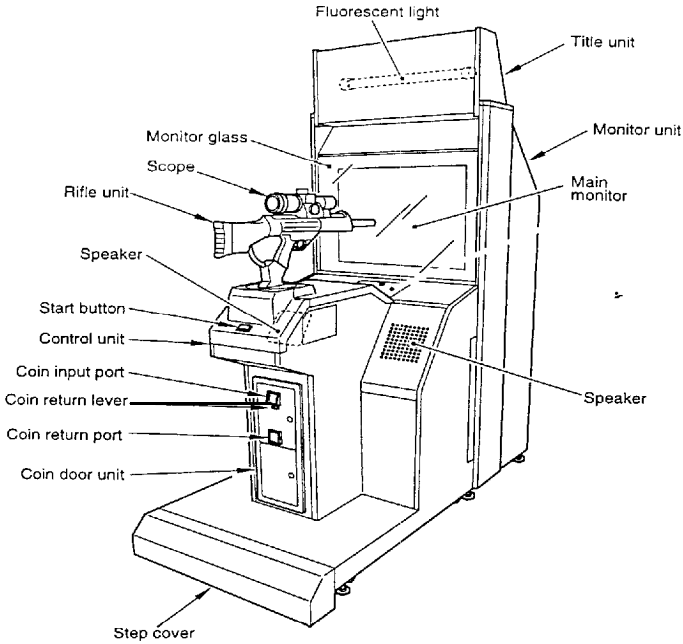

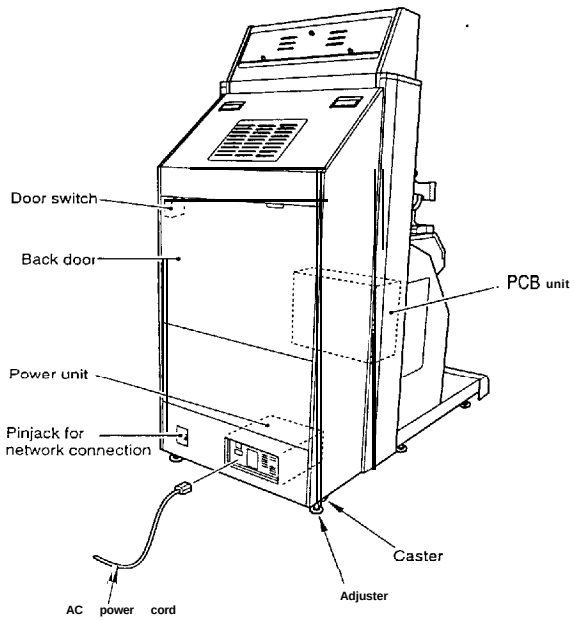

3 How to play

The "The Dark Silhouette SILENT SCOPE2™" gun shooting game is designed for you to look into the rifle unit's scope and snipe at enemy characters. Looking through the scope, you can find images in the distance or in the dark which cannot be pinpointed on the main monitor screen. You are challenged to find each target quickly and shoot at it precisely at the first shot.

How to play

1 Put coin(s) into the coin slot and press the start button.

2 The networked-play select screen appears. Before the counter reaches "0", move the rifle unit to select networked-play (accepted) or solo play mode and pull the trigger to enter the mode. (To enter the mode, you can press the start button instead.)
The player who can select the networked-play mode is set by the "LINK PLAYER SELECT" item on the "GAME OPTIONS" screen on page 17.

3 The play mode select screen appears. Before the counter reaches "0", move the rifle unit to choose from the following modes and pull the trigger to enter the mode. (To enter the mode, you can press the start button instead.)

Shooting range **mode....** The player tries to get the highest score possible within a specified time in the firing range.

Story mode . . . . . A story progresses in which you come to the rescue of the missile and hostages from a terrorist group.

Duel mode ..... The player tries to find a competing player or the CPU within a specified time. By the round-by-round match **play rules, the player** who has taken all the life points wins the game. (How many life points you take depends on where you hit the target.) There are 3 courses: CITY, FOREST and AIR.
(competitive play)

In any game mode, you can join the networked-play or the ongoing play halfway.
(Note that you cannot join the game if the first player has selected the "SOLO" mode.)

4 Once a play mode has been selected, the game starts automatically.
- Watch for an enemy on the main monitor screen, and looking through the scope, shoot at it. The rifle is loaded with 5 bullets and will automatically reload no matter how many times (the duel scene and the final scene not included).
- If you hit anyone but the enemies, you get a penalty and lose one life.
- When you find a woman (appearing in nurse or army uniform) through the scope, you gain one life.
- When you find a butler inviting you for a tea break through the scope, your time is prolonged.
- In the story mode, there are two ending styles: happy ending and bad ending.

5 The game ends when you have been attacked and lost all your life points or when the game clock expires.

Setting the hit effect at gunning down of an enemy

- There are several levels of the enemy's hit effect to choose from. (Refer to "GAME OPTIONS" screen on page 17.)

Continuing the game

You can continue the game if you insert coins before the counter reaches "0" when the game ends. You cannot continue in Duel Mode or in the final scene of Story Mode.

Nemorked play

- When two machines are networked, Networked-play Mode can be selected.
- Put the coin(s). Within 10 counts, select networked-play mode (accepted) or solo play mode and pull the trigger to enter the mode. (To enter the mode, you can press the start button instead.)
- Various settings for the duel (competitive play) mode are referred to in "GAME OPTIONS" on page 17.

Joining a game in progress

- You can join the game at anytime except the combat scene and the final scene

4 Networking game machines and game settings

4-1 How to networking

The networked-play specifications allow two game machines to be connected. To network the machines, install them next to each other and connect the accompanying networking cable (2 m) to the network pin jack of the monitor unit.

***When using the game machine independently, do not connect anything to the pin jack for network connection.**

•The network connection pin jack is dedicated to the "Dark Silhouette SILENT SCOPE2™" machine. Never use it for any other game machines and audio-visual equipment. Be sure to employ it to interconnect the same "Dark Silhouette SILENT SCOPE2™" machines.

***Be sure to use the accompanying networking cable.**

•When the networking cable has been connected, make the "NETWORK ID" setting (see "NETWORK OPTIONS" on page 19) and then check the setting in "NETWORK CHECK".

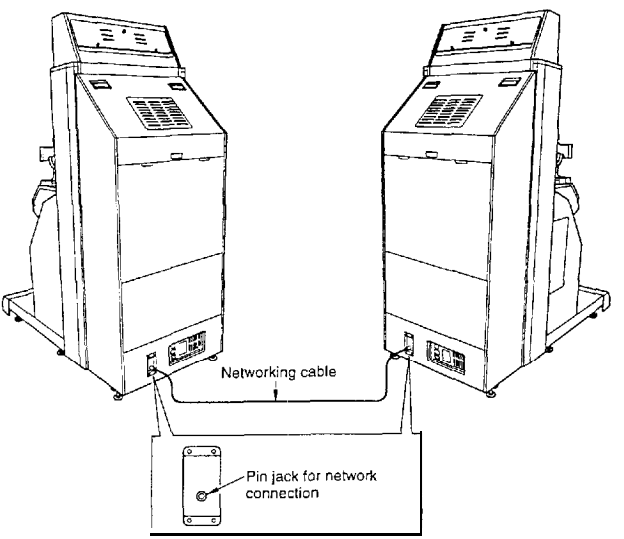

5 Game settings

5-I Checking the game performance

■ When the main power switch is turned ON after installation of the machine, the game Printed Circuit Boards (PCB) are checked automatically and the result is displayed on the screen.

***Be sure to check the PCB unit (self test) before using the machine.**
-Once the main power switch has been turned on (while the PCB unit is being checked), never touch the rifle unit until the demonstration game gets started.
***Preferably turn OFF the main power switch while the LCD screen of the scope is off (this happens if the game is not played for longer than 30 seconds) in order to prolong the product service life.**
•Do not change the DIP switch setting of this product to other than factory setting.
•If an abnormality persists or the machine does not operate properly, immediately turn OFF the main power switch, unplug the power cord from the receptacle and contact your nearest dealer.

■ ☼♏•♦●♦□♐♦♏•♦

If test is OK

·The machine goes to the game mode and the demonstration game starts..

If any abnormality is detected

"BAD" appears on the screen, and the check is' repeated

After the installation of this product or when the PCB unit has been repaired or replaced, turn ON the power switch while pressing the test button of the service panel to initialize the setting once to the original factory setting.
At this time, keep pressing the test button until "BACKUP DATA INITIALIZED COMPLETE/OPTION SETTINGS/RANKING DATA/BOOKKEEPING INCOME DATA/PLEASE RELEASE TEST SWITCH" appears.

Never turn ON the power switch while holding down the test button. All the "BOOKKEEPING" data will be erased. (The data once erased can not be restored.)

If an abnormal display continues or the machine does not operate normally, immediately turn OFF the main power switch, unplug the power cord from the receptacle and contact your nearest dealer.

■ **On-screen message at power on**

When the machine is powered on for the first time after installation, the following screen shows up. Set the clock on the " BOOKKEEPING" screen. (See page 18.) If the clock has not been set, this message appears each time the power is turned on. When the clock has been set, the message does not appear at power on. It appears again if the "BOOKKEEPING" data is cleared.

[CLOCK]
PRESS TEST SWITCH to MANUAL TEST MODE

5-2 Setting and adjustment of game mode

Manually check and change the settings for the screen displays and game contents and change them as required.

■♦♦♋□♦♓■♋♦♒♏♦♏♦♦❍□♎♏

1 Turn ON the main power switch.
2 While the demonstration game is playing, press the test button on the service panel. (Do not turn ON the main power switch with the test button held down. The current settings as well as the BOOKKEEPING data will be erased and the machine will revert to factory settings.)
The main menu is displayed on the screen.

■ Quit the manual test mode

1 Pull the rifle unit's trigger to select "GAME MODE" on the **main menu screen.**
2 Press the start button.
·The screen goes back to the game mode.

■ Main menu screen (basic items)

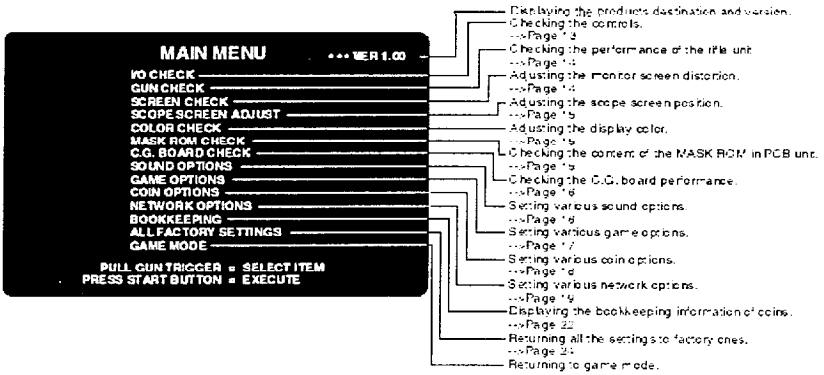

·If an error happens in "SCOPE SCREEN ADJUST DATA" or "GUN VOLUME DATA" at the start of the machine, a triangular marker is displayed at the error item. Pick up the item and make new settings. The "GAME MODE" item does not appear until those settings are properly made. This means the game cannot be played.

MEMO

■ Selecting each mode

How to select each mode from the main menu.

·SELECT --> Pull the rifle unit's trigger.

·SET --> Press the start button.

After selecting a mode, refer to the page on which that mode is described in details.

5-3 Mode descriptions

■ The original factory settings are displayed in green; the changed settings are displayed in red.

·Pull the rifle unit's trigger to select a setting to be modified, and press the start button to change the setting.

·After the setting has been changed, select 'SAVE AND NEXT" and press the start button for entry.

"NOW SAVING" will appear, the modified settings will be saved, and the screen returns to the main menu.

·If "EXIT" is selected after the modification of the settings, the following message will appear.

"YOU DID NOT SAVE. DO YOU WANT TO SAVE? YES/NO" select "YES" or "NO". Pull the rifle unit's trigger to select "YES" or "NO". Press the start button for entry. If "YES" is selected, the new settings will be saved with "NOW SAVING" displayed and the screen will return to the main menu.

If "NO" is selected, the message "NO MODIFY SETTINGS" will appear, the modified settings will not be saved, but the main menu will show up again on the screen.

•If "FACTORY SETTINGS" is selected and the start button is pressed, all the settings of the mode will go back to the factory ones.

•If "DEFAULT SETTINGS" is selected, the settings of the mode will become the default ones.

MEMO

Checking the controls

■ Mode for checking the performance of the controls.

To return to the main menu screen, pull the rifle unit's trigger while pressing the start button.

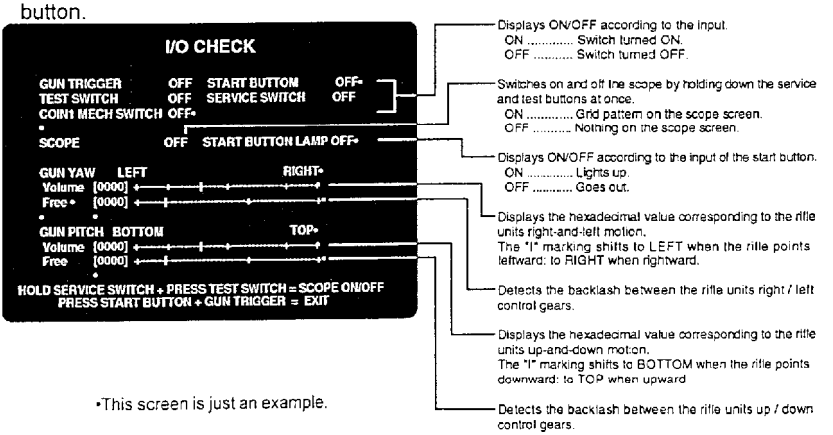

•This screen is just an example.

GUN CHECK

Checking the performance of the rifle unit

■ Mode for adjusting and checking the rifle unit's swing range.

Look at the screen for the marker that the gun barrel is pointing to. If the marker is extremely out of position, press the test button on the service panel to call the gun adjustment mode.

To return to the main menu screen or interrupt the gun adjustment mode, press the start button.

Gun check **mode**

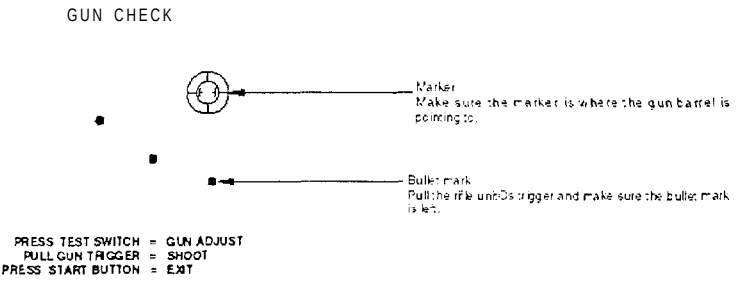

•This screen is just an example.

Gun adjustment mode

This mode is intended to calibrate the rifle unit. Take the following adjustment procedure.

1 Point the gun barrel to the lower-left corner of the screen, and pull the rifle unit's trigger.

2 Point the gun barrel to the upper-right corner of the screen, and pull the rifle unit's trigger.

3 The "NOW SAVING" message appears and the settings will be saved. Then the "GUN CHECK" screen shows up again. Move the rifle unit and **make sure the** marker is in position.

•If an error happens in "GUN VOLUME DATA" at the start of the machine, the "Gun adjustment mode" screen shows up automatically.
•No image appears on the scope while in the "Gun check mode" and "Gun adjustment mode".

MEMO

SCREEN CHECK

Adjusting the monitor screen distortion

■ Mode for checking the monitor screen display.

Adjust the focus, distortion and size of the image on the screen while watching the crosshatch pattern. Use the monitor adjustment PCB (which is connected to the monitor) to make adjustments.

To return to the main menu screen, press the start button.

SCOPE SCREEN ADJUST

Adjusting the scope screen position

■ Mode for adjusting the display position on the scope screen.

Pull the rifle unit's trigger to select an item. Press the start button to modify the setting

Looking into the scope, adjust so that the crosshatch pattern is centered.

To return to the main menu screen, select "SAVE AND EXIT" or "EXIT" and press the start button.

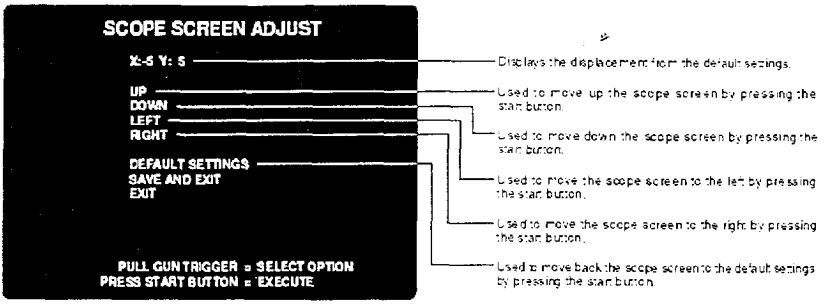

•This screen is just an example.

•The crosshatch pattern may appear slightly tilted on the scope screen. The game is not affected, however.

MEMO

COLOR CHECK

Adjusting the display color

■Mode for checking the display color.

Make the adjustment using the monitor adjustment PCB (which is connected to the monitor) so that the colors of the color bars should appear properly graduated and the background should become black sufficiently.

To return to the main menu screen, press the start button.

Checking the content of the MASK ROM in PCB unit

■Mode for checking the MASK ROM on the game PCB unit.

If the MASK ROM is not in trouble, "OK" is displayed: if in trouble, "BAD" is displayed. Once in this mode, this check starts automatically. To return to the main menu screen, press the start button.

-If "BAD" is indicated, turn OFF the power switch and turn it ON again. If "BAD" still appears, write down the ROM number. And immediately turn OFF the main power switch, unplug the power cord and contact your nearest dealer,

C.G. BOARD CHECK

Checking the C.G. **board performance**

■ Mode for checking the C G board function.

Check the function of the C G. board by watching the motion on the screen in this mode to see if the board works normally or not.

To return to the main menu screen, press the start button.

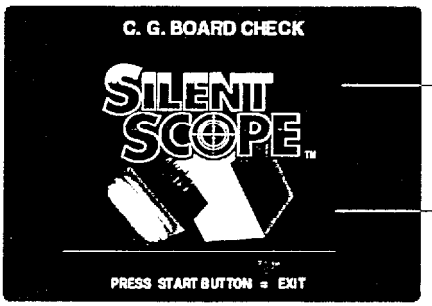

The products logo mark flashes semi-transparent here.
iThe KONAMI logo mark appears on the scope.i

Two cubes are turning entangled each other behind the logo mark.

OPTION

Setting various sound options

■ Mode for setting and checking the sound options.

Pull the rifle unit's trigger to select an item. Press the start button to modify the setting.

To return to the main menu screen, select "SAVE AND EXIT" or "EXIT" and press the start button.

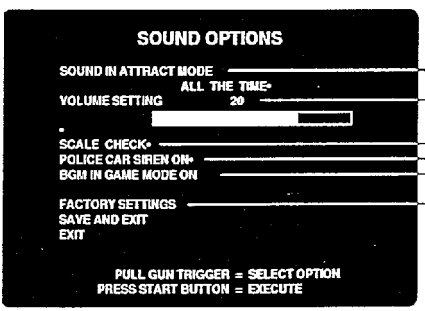

Turns on and off the demo play sound.
ALL THE TIME..... Sound always on.
ONCE EVERY 4 CYCLES... Sound on every 4 cycles.
COMPLETELY OFF..... Sound always off.

Adjusts the sound volume level of voice and sound effects in the range of 0 (mute) to 30 (maximum).
•To raise the sound level, press the start button.
•To lower the soundlevel, press the start button so many times that the zero level is reached and make a new setting.

You will hear a do-re mi...do musical scale from the left speaker first and then from the right speaker, which is repeated twice.
(Sound effect is given for the 2nd round.)

Switches on and off the police car siren during the game.
ON..... Siren on as specified.
OFF..... Siren always off.

Sets to give background music while the game is being played.
ON..... Background music heard.
OFF..... Background music not heard.

Press the start button to return all the settings to the factory settings.

•This screen is just an example.

Setting various game options

■ Mode for setting and checking the game options.

Pull the rifle unit's trigger to select an item. Press the start button to modify the setting.

To return to the main menu screen, select "SAVE AND EXIT" or "EXIT" and press the start button.

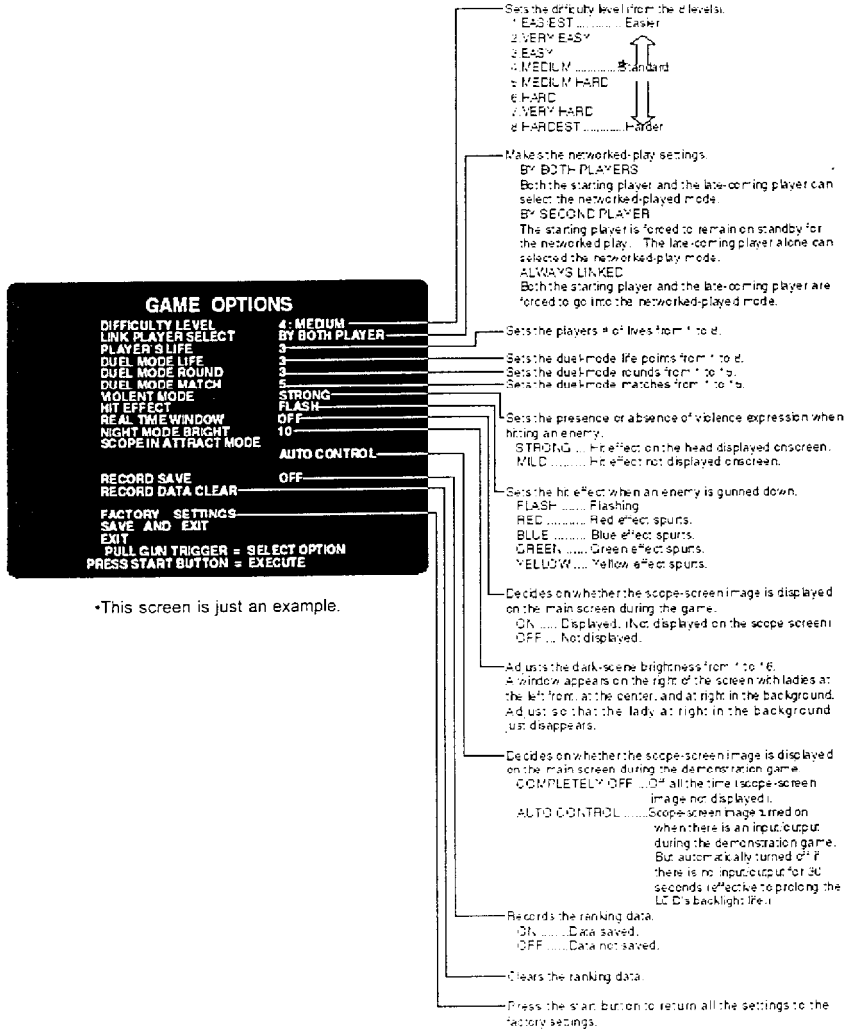

•This screen is just an example.

COIN OPTIONS

Setting various coin options

■ Mode for setting and checking the coin options.

Pull the rifle unit's trigger to select an item. Press the start button to modify the setting.

To return to the main menu screen, select "SAVE AND EXIT" or "EXIT" and press the start button.

***The coin setting options are not displayed when "FREE PLAY" is set to "ON". In such case, remember the games will be free.**

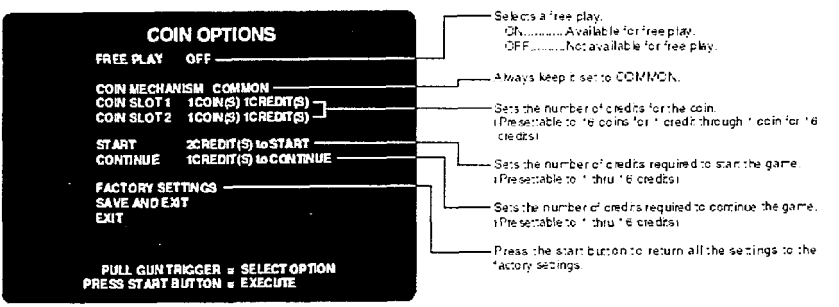

•This screen is just an example.

NETWORK OPTIONS

Setting various network options

■ This mode is used to set the network ID and to check the networking condition of each networked machine.

When the machines have been networked, be sure to check the networking condition on this screen.

Pull the rifle unit's trigger to select an item. Press the start button to modify the setting.

To return to the main menu screen, select "SAVE AND EXIT" or "EXIT" and press the start button.

•If any of the three items responds incorrectly, it indicates possible communication malfunction. Take measures while referring to Measures to be taken when there is a network abnormality on page 21.

•If the machine still shows the same malfunction or any problems that aren't discussed in this manual, immediately turn OFF the main power switch, unplug the power cord and contact your nearest dealer.

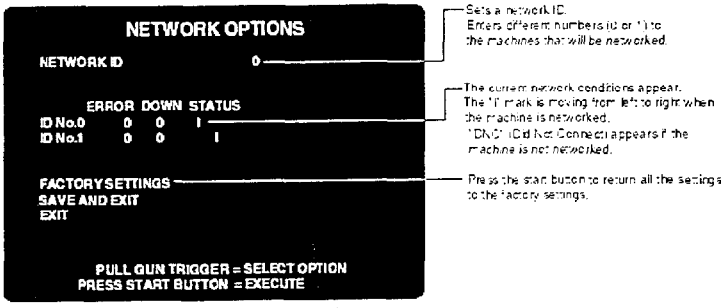

•This screen is just an example.

met) eck items (Watch the screen for longer than 1 minute and make sure the following 3 conditions are
:ed heck hat the "I" mark in the STATUS column is moving from the left to the right at a fixed
peed.
Check that the value in the ERROR column is below "10" after one minute,
·Check that the value in the DOWN column does not change from "0".

Screen display when game machines are networked

•When being networked

Screen for player 1

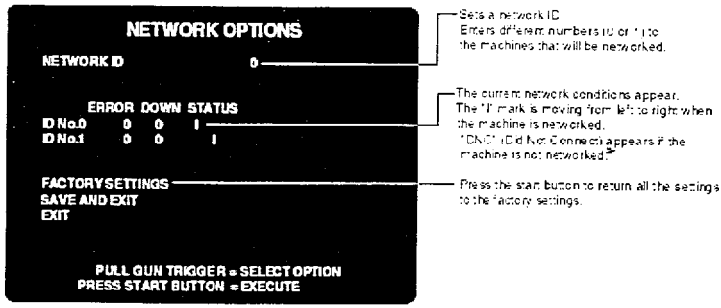

Screen for player 2

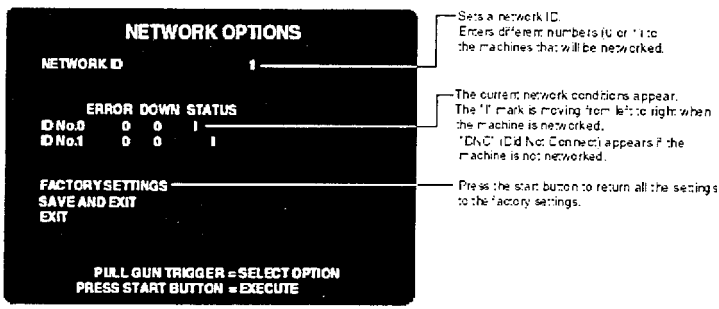

Measures to be taken when there is a network abnormality

■ Possible causes and measures to be taken ----------mm--

Possible Causes	Measures
-The "Network ID" settings are improper.	·Readjust the "Network ID" settings on the "NETWORK OPTIONS" screen in the test mode. (See page 19)
•The networking cable is damaged or not properly connected.	·Properly reconnect the networking cable between the machines. ·Replace the networking cable with new one.
•One of the networking cables has been disconnected from during play.	·1 .Tum OFF the main power switch. 2.Connect the networking cable properly. 3.Turn ON the main power switch.
•One of the networking cable has been internally damaged or broken.	'Replace the networking cable with new one. (You can also use commercially-sold video cable (75 :: 3C-FV) having a length of 2m(78.74in) or less.)

BOOKKEEPING

Displaying the bookkeeping information of coins

■Mode for displaying the total data on the number of coins put in the machine.

If the time is preset on the "CLOCK SETUP" screen, the total data on the number of coins put into the machine can be checked for each coin slot.

Pull the rifle unit's trigger to select "HOUR", "MINUTE", and "SECOND". Press the start button to adjust the current time.

Make sure the current time is correct, select "SAVE AND EXIT" and press the start button. (The current time is now set and the main menu screen shows up.)

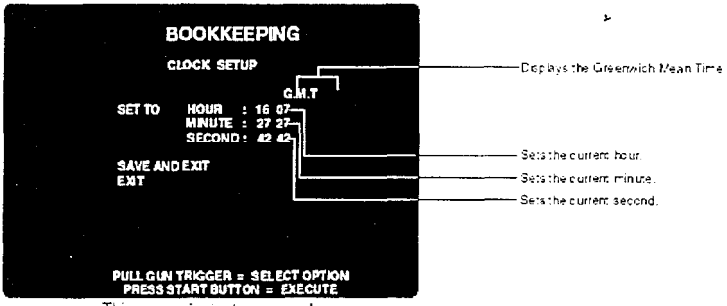

•This screen is just an example

•If the time setting has not been made – for example, after the machine has been set up or initialized –, the "CLOCK SETUP" screen shows up.

•When the time setting has been modified, the bookkeeping information is automatically cleared. With the current time not set, the total of received coins and other bookkeeping data are not displayed. (The data once erased can not be resumed.)

MEMO

■When the time has been preset on the "CLOCK SETUP" screen as shown above, the following "BOOKKEEPING" information is displayed on the screen. Select "NEXT DATA SUMMARY" and press the start button, and the screen will switch in the following sequence. To return to the main menu screen, select "EXIT" and press the start button.

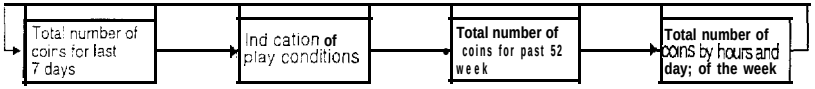

Also, when the current time has been set and "INCOME DATA CLEAR" has been selected and the start button pressed, the current time and BOOKKEEPING data can be cleared.

At this time, the question "DO YOU WANT TO CLEAR DATA? YES/NO" is indicated on the screen. Pull the rifle unit's trigger to select "YES" or "NO". If "YES" is selected, "NOW CLEARING" appears on the screen and the "BOOKKEEPING" data will be deleted. The data will be saved in the factory settings and the main menu screen will show itself up.

If "NO" is selected, "NO MODIFIED" is indicated and the main menu appears again without deletion of the data.

Screen of the total number of coins for last 7 days

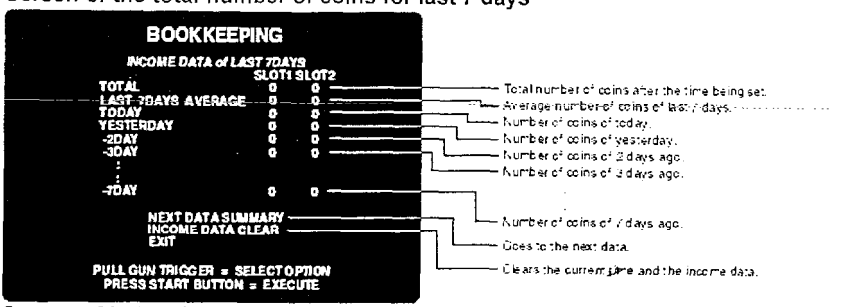

Screen of indication of play conditions

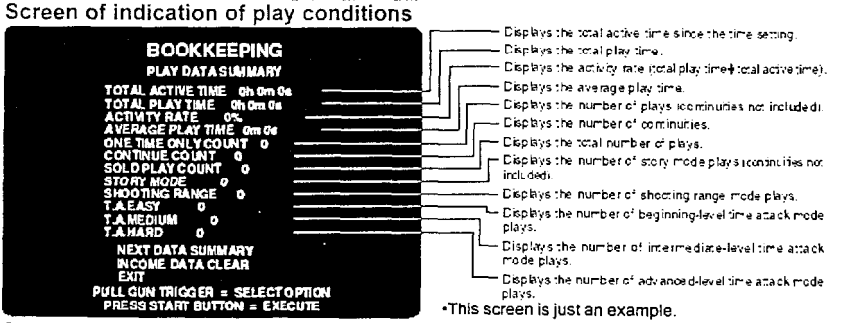

•This screen is just an example.

Screen of the total number of coins for past 52 weeks

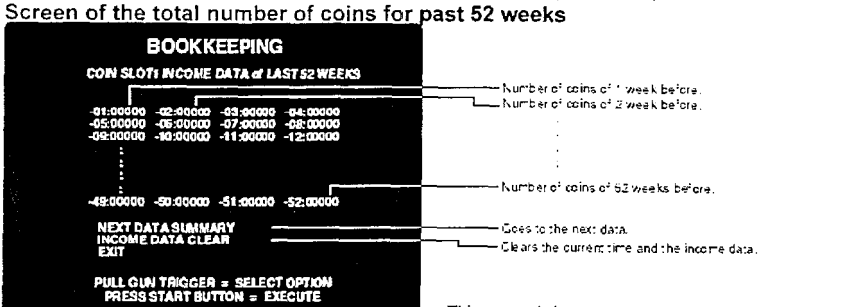

•This screen is just an example.

Screen of the total number of coins by hours and days of the week

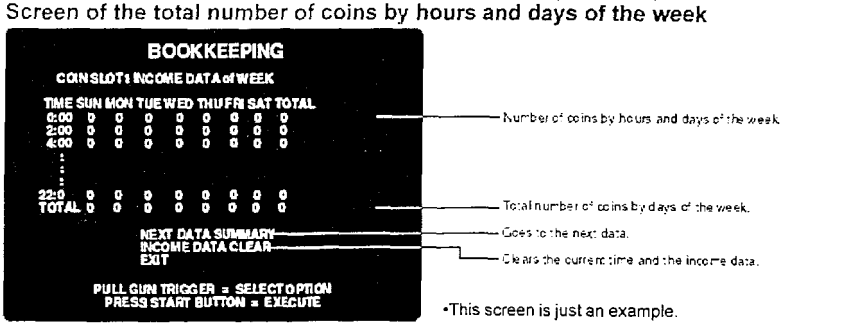

•This screen is just an example.

ALL FACTORY SETTINGS

Returning all the settings to factory ones

■ Mode for returning the test-mode settings to the factory settings.

Pull the rifle unit's trigger to select "YES" or "NO" and press the start button for entry.

If "YES" is selected, the question for reconfirmation appears on the screen.

If "YES" is selected again, the "NOW SAVING" message appears on the screen and the next test-mode settings are saved as the factory settings.

- **SOUND OPTIONS**
- **GAME OPTIONS**
- **COIN OPTIONS**

If "NO" is selected, "NO MODIFY SETTING" is indicated. This means the modified settings are not saved.

6 Installation and assembly

6-I Installing the step cover

■ How to install the step cover

First make sure the machine is secured with the adjusters and then attach the step cover as shown below.

1 Remove the screws and detach the step cover.

2 Place the step cover back in position and fix it with the five screws. See the figure at right.

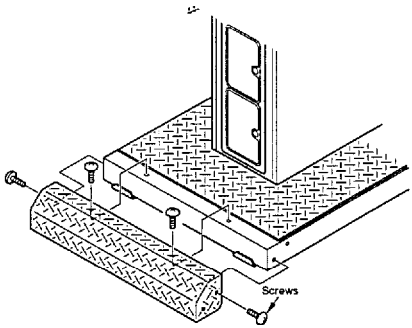

6-2 Installing the title unit

■ **How to install the title unit**

-Before installing the title unit, be sure to turn OFF the main power switch and unplug the power cord from the receptacle.
***Before installing the title unit, make sure the adjusters of the machine are tight on the floor.**
● **The title unit is heavy. Be sure to make a team of 2 people or more and to use stepladders or the like for added safety.**
***When connecting the title unit, take care not to catch the wiring and your hand between the unit.**

1 Be sure to turn OFF the main power switch and unplug the power cord from the receptacle.

2 Connect all the specified connectors. Place the title unit on the monitor unit with care not to get the wires caught between them.

3 Fix the title unit with the accompanying title unit mounting screws.

6-3 Power unit

Power unit

The power supply unit is installed at the rear side of the machine.

•Be sure to use the attached AC power cord.

***Be sure to ground to the machine. Never connect the grounding wire to gas pipe, water pipe or telephone ground terminal.**

***There are high-voltage parts inside the product. Other persons than qualified industry specialist should not open the back door and side door. When the back door and side door is opened, pay due attention not to touch the inside unnecessarily.**

***Before opening the back door and side door, be sure to turn OFF the main power switch and unplug the power cord from the receptacle.**

***Preferably turn OFF the main power switch while the LCD screen of the scope is off (this happens if the game is not played for longer than 30 seconds) in order to prolong the product service life.**

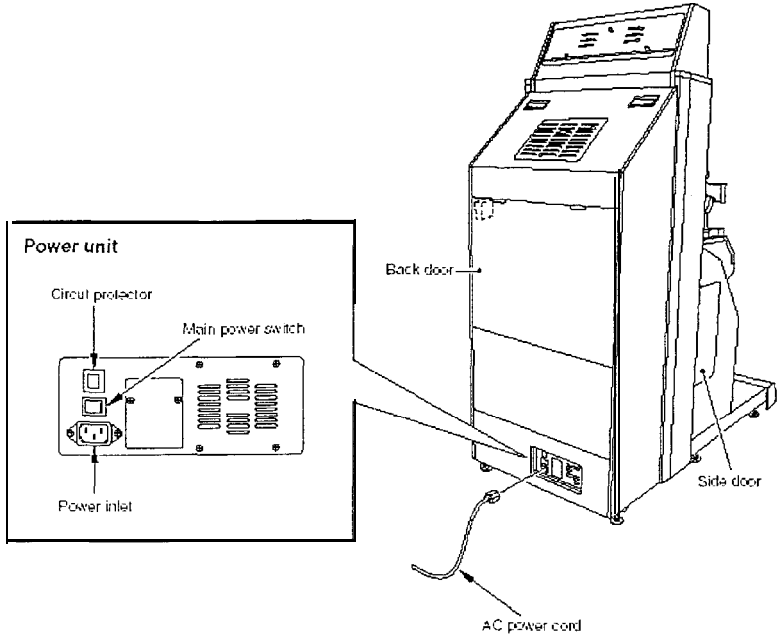

6-4 Separating the machine

■ **How to sepa'rate the machine**

The machine can be divided into the units.

***Before separating the units from the machine, be sure to turn OFF the main power switch and remove the power cord plug from the receptacle.**

- **Before moving the machine, be sure to turn OFF the main power switch, unplug the power cord from the receptacle and remove the power cord from the machine.**

***Before moving the machine, be sure to fully lift the adjusters and move it on the casters.**

***When moving the monitor unit, be sure to push it along sideways (to the right or left). When moving it on a slope or getting it over a "step", be sure to take the buddy system.**

- **When connecting the separated units, take care not to catch the wiring and your hand between the units.**

■ **How to separate the monitor unit and control unit**

1 Be sure to turn OFF the main power switch and unplug the power cord from the receptacle.

2 Raise the adjusters to let the casters come in contact with the floor.

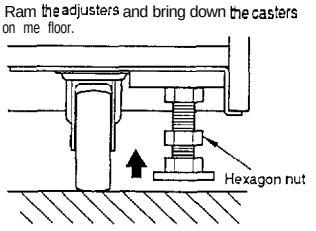

3 Unscrew the fixtures off both sides. Draw the units 100 mm (3.94 in) or shorter apart from each other

•Be careful not force the units too far from each other. The wires connected between the units may be damaged inside.
•Fix each of the unit on the monitor unit and fix it by tightening the screws

MEMO

4 Disconnect all the connectors.

7 Maintenance

7-1 Replacing the fluorescent light

■ **How to replace the fluorescent light**

***Before replacing the fluorescent light, be sure to turn OFF the main power switch and unplug the power cord from the receptacle.**
•The florescent light is hot just after the power switch is turned off. Wait until it cools down and then replace it with a new one of the same type.
***When replacing parts, be sure to use parts of the correct specifications. Never use parts other than the specified ones.**
•Strictly refrain from disassembly and repair of parts which are not indicated in this manual, as well as settings and remodelling.

1 Be sure to turn OFF the main power switch and unplug the power cord from the receptacle.

2 Remove the screws from the top marquee bracket. Carefully raise the marquee to expose the fluorescent light.

3 Push one end of the fluorescent light in the direction of the socket. The other end of the fluorescent light will be detached from the opposite socket.

4 Install a new fluorescent light in the reverse order.

MEMO
•It is recommended to replace the glow lamp at the same time.

7-2 Replacing the start button

■ How **to replace the start button**

***Before replacing the start button, be** sure **to turn OFF the main power switch and unplug the power cord from the receptacle.**

- **When replacing parts, be sure to use parts of the correct specifications. Never use parts other than the specified ones.**

-Strictly refrain from disassembly and repair of parts which are not indicated in this manual, as well as settings and remodeling.

1 Be sure to turn OFF the main power switch and unplug the power cord from the receptacle.

2 Remove the screws and datach the purple plastic cover.

•Be careful not to force the cover up too far. The wires connected may be damaged inside.

MEMO

3 Disconnect the connectors

4 Remove the screw from the band that secures the button and the socket.

5 Seperate the socket from the button.

6 Loosen the nut and separate the button.

7 **To reinstall the button again**

To install the button, take the reverse procedure.

8 Pay attention to the posture of socket and assemble it in the reverse of disassembly, using care not to confuse the wires.

9 Reconnect the connectors (disconnected in Step 3 above).

10 Mount the cover into position.

11 Take the steps in “4-1 Checking the game performance (self test)” on page 11 and the steps in “I/O CHECK” on page 13.

-Replacing the socket

Reconnect the wires to a new socket as shown below.

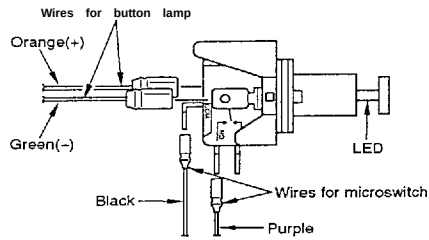

Be sure to connect the orange and green wires to the (+) and (-) terminals. respectively, that are marked on the LED PC board.

MEMO

7-4 Replacing the rifle unit

How to replace the rifle unit

-Before replacing the rifle unit, be sure to turn OFF the main power switch and unplug the power cord from the receptacle.
•The rifle unit weighs approx. 4 kg (8.8 lb). Be careful not to drop it.
● When replacing parts, be sure to use parts of the correct specifications. Never use parts other than the specified ones.
***Strictly refrain from disassembly and repair of parts which are not indicated in this manual, as well as settings and remodelling.**

1 Be sure to turn OFF the main power switch and unplug the power cord from the receptacle.

2 Remove the screws (see at right).

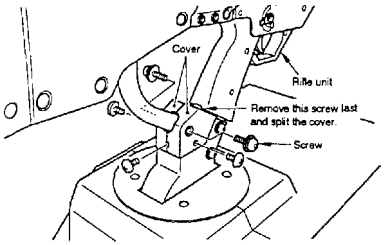

3 Detach the cover and remove another set of screws (see at right).

4 Lift the rifle unit and disconnect the connectors.

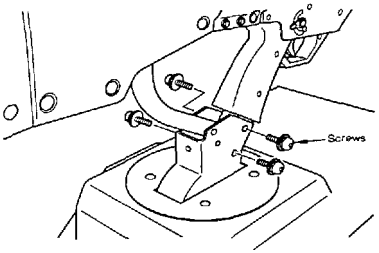

•Be careful not to force the rifle unit up too far. The wires connected may be damaged inside.

MEMO

5 **To fit the rifle unit again**

To install the rifle unit, take the reverse procedure.

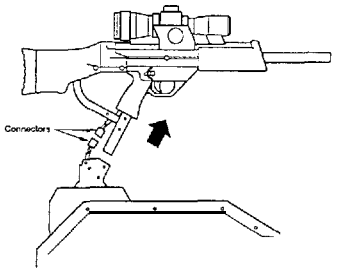

6 Take the steps in "4-1 Checking the game performance (self test)" on page 11 and the steps in "I/O CHECK" on page 13.

7-5 Replacing the rifle unit microswitch

How to replace the microswitch

● Before replacing the microswitch of the rifle unit's trigger, be sure to turn OFF the main power switch and unplug the power cord from the receptacle.
•When replacing parts, be sure to use parts of the correct specifications. Never use parts other than the specified ones.
***Strictly refrain from disassembly and repair of parts which are not indicated in this manual, as well as settings and remodelling.**

1 Be sure to turn OFF the main power switch and unplug the power cord from the receptacle.

2 Remove the screws (see at right) and detach the cover of the trigger.

A : M5 x 25L 2
B : M4 x 30L 2
C : M4 x 8 L (no cap nut) 4
D : M4 x 10L 1

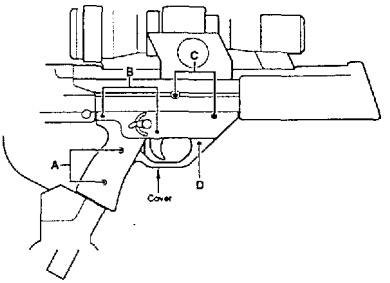

3 Detach the microswitch.

4 Disconnect the wires from the microswitch.

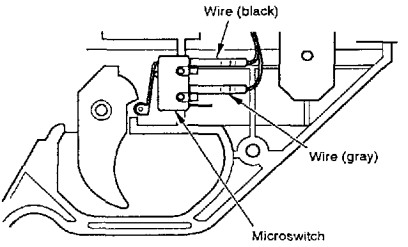

5 **To fit the microswitch again**
Fit a new microswitch in the reverse order. Be careful not to get the wires caught.

6 Place and fix the cover (detached in Step 2 above) back into position

7 Take the steps in "4-1 Checking the game performance (self test)" on page 11 and the step in "I/O CHECK"on page 13.

7-6 Replacing the scope

■ How to replace the scope

***Before replacing the scope, be sure to turn OFF the main power switch and unplug the power cord from the receptacle.**
-When replacing parts, be sure to use parts of the correct specifications. Never use parts other than the specified ones.
***Strictly refrain from disassembly and repair of parts which are not indicated in this manual, as well as settings and remodelling.**

1 Be sure to turn OFF the main power switch and unplug the power cord from the receptacle.

2 Remove the screws (see at right) and detach the scope up straight.

A : M5 x 25L 2
* B : M4 x 30L 2
C : M4 x 8 L (no cap nut) 4
D : M4 x 10L 1

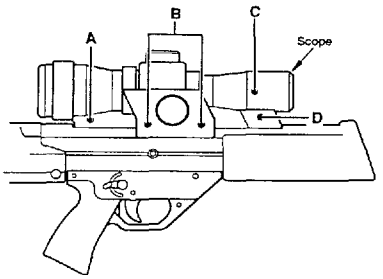

'Use the accompanying allen wrench to remove the screws.

3 Disconnect the connectors.

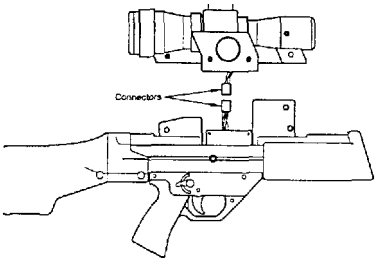

MEMO

•Be careful not to force the scope up too far. The wires connected may be damaged inside.

4 **To fit the scope again**
Fit a **new** scope in the reverse order. Be careful not to get the wires caught.

5 Take the steps in "4-I Checking the game performance (self test)" on page 11 and the step in "I/O CHECK"on page 13.

7-7 Replacing the rifle unit potentiometers

■ **How to replace the rifle unit potentiometers**

***Before replacing the rifle unit potentiometers, be sure to turn** OFF the **main power** switch and unplug **the power cord from the receptacle.**

***When replacing parts, be sure to use parts of the correct specifications. Never use parts other than the specified ones.**

***Strictly refrain from disassembly and repair of parts which are not indicated in this manual, as well as settings and** *remodelling.*

1 Be sure to turn OFF the main power switch.

2 Unplug the power cord from the receptacle.

3 Detach the cover

4 Disconnect the wires from the potentiometers.

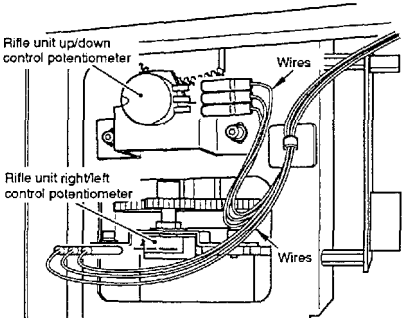

5 Remove the bolts off the potentiometer brackets. Detach the potentiometers and their brackets together.

6 Remove the hexagon nut and separate the potentiometer.

Rifle unit up/down control potentiometer

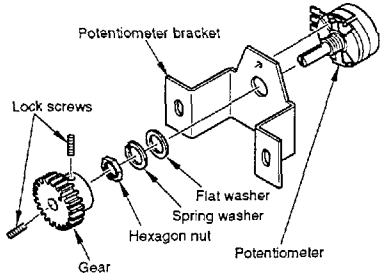

Rifle unit right/left control potentiometer

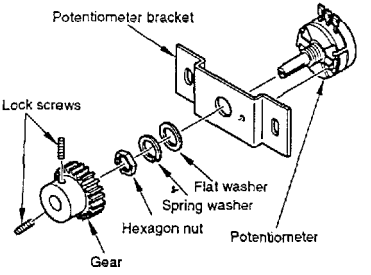

MEMO

When replacing the potentiometers with new ones, be sure to first make the adjustment on the next page.

■ Howto adjust the rifle unit potetiometers

1 Fit the potentiometer projection to the smallest hole of the potemtiometer bracket. Tighten up the hexagon nut.

2 Install the gear onto the shaft of the potentiometer. Tighten up the two lock screws.

Rifle unit up/down control potentiometer

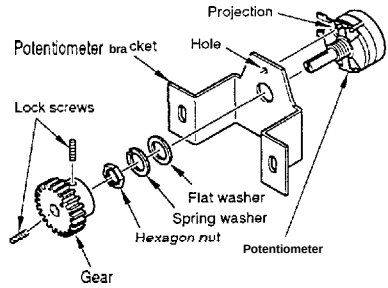

Rifle unit right/left control potentiometer

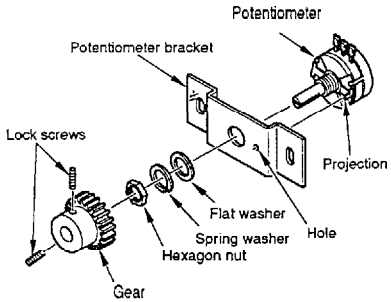

3 Align the potentiometer tip, as shown below.

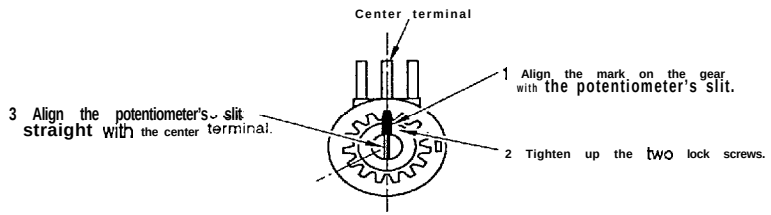

4 Set the potentiometer bracket so that the mark on the potentiometer gear and that on the mating gear be in alignment (see below). Also adjust the gears into good mesh.

Rifle unit up/down control potentiometer

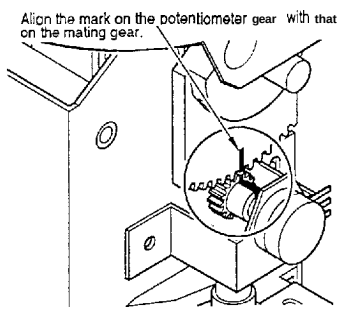

Rifle unit right/left control potentiometer

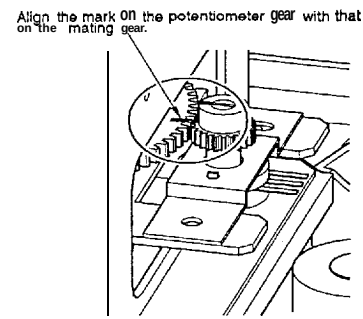

5 Place and fix the potentiometer brackets with the bolts

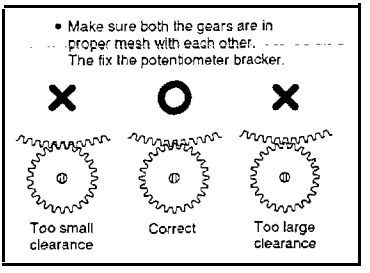

6 Reconnect the wires back to their respective terminals.

7 Place and fix the cover (detached in Step 3 on page 31).

8 Plug in the power cord and turn ON the main power switch.

9 Take the steps in "4-1 Checking the game performance" on page 11 and the steps in "I/O CHECK" on page 13. Follow the procedure below to check the rifle unit performance.

1 Swing the rifle unit all the way to the left or the right, Hold it in this position.
2 Make sure that the "I" bar in "Volume" of "GUN YAW' is not in the red range. If in the red range, the potentiometer may get in trouble. Reposition and readjust the potentiometer so that the "I" bar comes into the green range.
3 While holding the rifle unit in that position, make sure that the "Free" reading is "0000".(If the reading is not "0000", go back to the above step 1.)
4 Make sure the reading is "OOOO", and make one turn of the potentiometer gear gently by hand. If the "I" bar in "Free" comes in the red range again, it means the gear's clearance is too large. This fails to play the game. Readjust the potentiometer gear into good mesh. Finally make sure the "I" bar is in the green range.

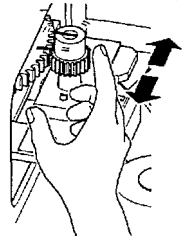

10 Make sure the rifle unit functions as specified. Place and fix the cover (detached in Step 3 on page 35) with the screws.

7-8 Removing the PCB unit

■ **Howto take out the PCB unit**

***Be sure to ask a qualified industry specialist or your nearest dealer to take out the PCB unit. (You will be charged.)**
***Before removing the PCB unit, be sure to turn OFF the main power switch and unplug the power cord from the receptacle.**
•There are high-voltage parts inside the product. Other persons than qualified industry specialist should not open the side door. When the side door is opened, pay due attention not to touch the inside unnecessarily.
•Do not touch the PCB unit with wet hands.
***Keep the PCB unit's DIP switches at the factory settings.**
***Strictly refrain from disassembly and repair of parts which are not indicated in this manual, as well as settings and remodelling.**

1 Be sure to turn OFF the main power switch and unplug the power cord from the receptacle.

2 Unlock and detach the back door of the monitor unit.

3 Disconnect all the connectors from the PCB unit.

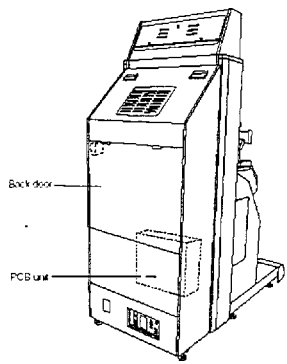

4 Detach the pcb from the side wall of the monitor cabinet..

•Be careful not to force the cover up too far. The wires connected may be damaged inside.
-Factory-adjusted DIP switch settings:
·Bit Nos. 1 thru 8: Set at OFF

MEMO

5 To reinstall **the PCB unit again**
Attach the pcb to the side wall of the cabinet.

6 Reconnect the connectors.

7 Secure the back door.

7-9 Resetting the circuit protector

How to reset the circuit protector

If an overcurrent or short circuit occurs, the circuit protector will be automatically actuated to protect the electric circuits of the game machine, When resetting the circuit protector, turn OFF the main power switch, unplug the power cord from the receptacle, eliminate the cause, and then press the button of the circuit protector.

•Before resetting the circuit protector, be sure to turn OFF the main power switch and unplug the power cord from the receptacle.
***If the circuit protector trips soon again, immediately turn OFF the main power switch, unplug the power cord, and contact your nearest dealer.**
***There are high-voltage parts inside the product. Other persons than qualified industry specialist should not open the back door and side door. When the back door or side door is opened, pay due attention not to touch the inside unnecessarily.**
•When opening the back door or side door, be sure to turn OFF the main power switch and unplug the power cord from the receptacle.
● If the machine is in abnormal conditions and does not operate normally, immediately turn OFF the main power switch, unplug the power cord from the receptacle and contact your nearest dealer.

1 Be sure to turn OFF the main power swith and unplug the power cord from the receptacle.

2 Remove the cause of the trouble. Press the button on the circuit protector of the power unit.

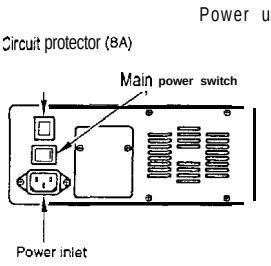

7-10 Adjusting the monitor

Monitor adjustment PCB

The monitor has already been adjusted at the time of shipment, but it maybe readjusted as desired. The monitor adjustment PCB is located inside the machine. To access the PCB, open the back door of the monitor unit..

7-11 Adjusting the brightness on the scope LCD screen

How to adjust the LCD screen brightness

***Strictly refrain from disassembly and repair of parts which are not indicated in this manual, as well as settings and remodelling.**

1. Turn ON the main power switch and get the game started.
2. While the demonstration game is playing, press the test button on the service panel.
3. Select “COLOR CHECK” on the main menu screen.
4. Remove the cap, shown at right, from the scope.
5. Insert the tip of a thin bladed screwdriver into this hole. Adjust the contrast while looking into the scope.

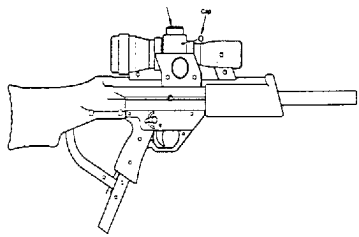

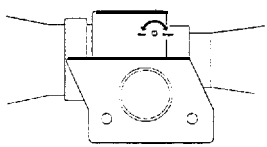

•Images on the scope LCD screen can also be displayed on the main screen during the demonstration game. For this setting, refer to “GAME OPTIONS” on page 17.

MEMO

7-12 Troubleshooting

If the main power switch has been turned ON but the machine does not get started. Check the points listed below. If the machine still fails, immediately turn OFF the main power switch, unpiug the power cord from the receptacle and contact your nearest dealer.

Trouble	Possible cause 8 check point	Measures
No image on main screen, title unit fluorescent light fails to light up.	•No power supply.	◦Turn ON the main power switch. Check also store's circuit breaker.
	•Power cord unplugged at machine or wall outlet.	◦Reconnect power cord.
No image on main screen: title unit fluorescent light on, but PCB unit 7-segments display off.	*Connector(s) improperly connected when joining the separated units.	◦Reconnect connector(s) properly.
	•Wires (connectors) disconnected on PCB unit.	◦Check to see if PCB unit wires (connectors) are all connected.
Title unit fluorescent light failure to light up.	-Fluorescent light or glow lamp broken.	◦Replace fluorescent light and glow lamp with same-type ones. (See page 29.)
	*Connector(s) improperly connected when joining the separated units.	◦Reconnect connector(s) properly.
Main monitor screen too dark or too bright.	*Monitor maladjusted.	◦Readjust brightness on main monitor screen using monitor adjustment PCB. (See page 14.)
Game started, but no image on scope screen.	*Connector(s) improperly connected after replacing the rifle unit or the scope.	◦Reconnect connector(s) properly.
	•Wires (connectors) disconnected on PCB unit.	◦Check to see if PCB unit wires (connectors) are all connected.

Trouble	Possible cause & check point	Measures
Start button malfunctioning.	*Switch wires disconnected from start button socket.	◦Reconnect switch wires properly to socket.
	•Wires (connectors) disconnected on PCB unit.	◦Check to see if PCB unit wires (connectors) are all connected.
	•Start button defective.	◦Replace start button as required. (See page 30.)
Start button functioning, but button lamp failure to light up.	•Lamp wires disconnected from start button socket, or improperly connected.	◦Reconnect lamp wires properly to socket.
	•Start button lamp (LED) defective.	Check performance on "I/O CHECK" screen. Replace start button as required. (See page 30.)
Rifle unit's trigger malfunctioning.	-Wires disconnected from triggers microswitch.	◦Reconnect microswitch wires properly.
	-Wires (connectors) disconnected on PCB unit.	◦Check to see if PCB unit wires (connectors) are all connected.
	•Trigger's microswitch defective.	◦Check performance on "I/O CHECK" screen. Replace trigger's microswitch as required. (See page 33.)
Coin selector malfunctioning	•Coin selector defective.	◦Check performance on "I/O CHECK" screen. Replace coin selector or microswitch as required.

Trouble	Possible cause & check point	Measures
Rifle unit orientation cursor failure to move or out of position.	*Reference settings greatly out of spec.	◦Check performance on "I/O CHECK" screen. Make new settings on "GUN CHECK" screen as required. (See page 14.)
	•Wires disconnected from rifle unit's potentiometer.	◦Reconnect potentiometer wires properly.
	*Rifle unit's potentiometer improperly installed.	◦Install potentiometer properly.
	•Rifle unit's potentiometer defective.	◦Replace potentiometer with new one. (See page 35.)
Image out of position on scope screen.	-Reference settings greatly out of position.	◦ Make new settings on "SCOPE SCREEN ADJUST" screen. (See page 15.)
mage too dark or too bright on scope screen.	•Scope LCD screen maladjusted.	◦Readjust brightness on scope LCD screen. (See page 41.)
No sound, or sound too weak or too loud.	-Sound level maladjusted.	◦Make new settings on "SOUND OPTIONS" screen. (See page 16.)
	•Wires (connectors) disconnected on PCB unit.	◦Check to see if PCB unit wires (connectors) are all connected.
No image on screen at start (power supplied and monitor well adjusted)	*Error message "Er**" in 7-segments display of PCB unit. (See page 51.)	◦Write down the error code "**", immediately turn OFF the main power switch, unplug the power cord from the receptacle and contact your nearest dealer.

Trouble	Possible cause & check point	Measures
"BAD" displayed on "MASK ROM CHECK" screen in test mode.	-Indicated Mask ROM defective.	◦Write down the error code "***", immediately turn OFF the main power switch, unplug the power cord from the receptacle and contact your nearest dealer.
"HARDWARE ERROR (***)" displayed on screen. Game failure to start	-Hardware getting in trouble.	◦Write down the error code "***", immediately turn OFF the main power switch, unplug the power cord from the receptacle and contact your nearest dealer.
Following display shown on screen at start. Game failure to start. 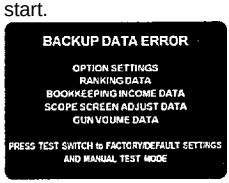	*Error in indicated item.	◦Press test button to return "OPTION SETTINGS", "RANKING DATA" and "BOOKKEEPING INCOME DATA" settings to factory ones. For "SCOPE SCREEN ADJUST DATA" and "GUN VOLUME DATA" settings, press test button to go back to test mode. Then make new settings.
The following message appears. (The game may fail to play.) 	-Something is wrong with the product.	◦Immediately turn OFF the main power switch, unplug the power cord from the receptacle and contact your nearest dealer.

8 Annex

8-1 Exploded views

FIG.1 UNIT

NO.	NAME	MATERIAL/SPECIFICATION	QTY	NOTE
01	UNIT, CABINET TITLE	-	1	
02	UNIT, CABINET HOLDER	-	1	
03	UNIT, GUN	-	1	
04	UNIT, CABINET FRONT	-	1	
05	JOINT	SECC T2.3	2	
06	COVER, JOINT	SECC T1.2	1	
07	COVER, JOINT	SECC T1.2	1	
101	SCREW, CROSS TRUSS	M6X16	4	
102	SCLT, BUTTON HEAD	M6X40	6	SW, PW
103	SCLT, BUTTON HEAD	M5X16	6	SW, PW
104	SCREW, CROSS TRUSS	M4X8	4	

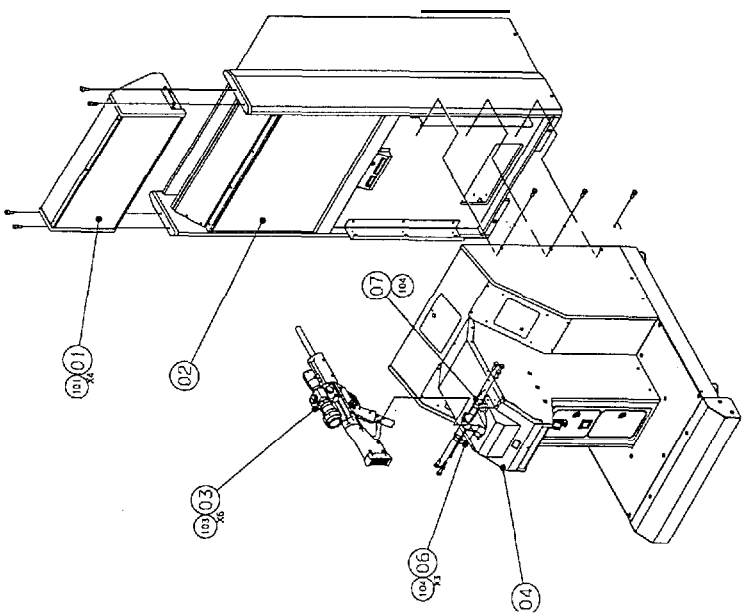

FIG.2 UNIT, RIFLE

NO.	CODE No.	NAME	MATERIAL/SPECIFICATION	QTY	NOTE
01	830810	ASS'Y, SCOPE	-	1	
02		ASS'Y, BARREL	-	1	
101		SCREW, CROSS TRUSS	M4X16	2	
102		BOLT, TORN CENTER PIN TRUSS	M4X26	4	
103		SCREW, CROSS TRUSS	M4X46	1	
104		NUT, DOMED CAP	M4	3	

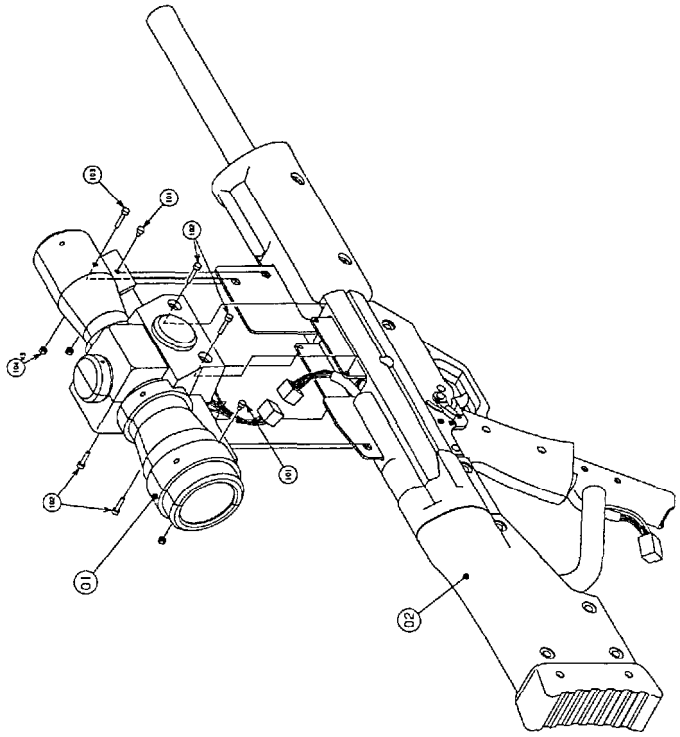

■ [illegible]

NO	CODE NO.	NAME	MATERIAL/SPECIFICATION	Q'TY	NOTE
01	830811	CASE, SCOPE(L)	PC	1	
02	830812	CASE, SCOPE(R)	PC	1	
03		PIPE, SCOPE	ABS	1	
04	830822	COVER, SCOPE	PC	1	
11	830814	COVER, LCD	SECC T1.0	1	
12	830817	BRACKET, LCD	SPCC T1.0	1	
13	830818	BRACKET, LCD	SPCC T1.0	1	
21		TAPE, SPONGE	DR FORM T3	2	
22		TAPE, SPONGE	DR FORM T2	8	
51	830816	DISPLAY, LCD	LD20IR-BC00	1	
52	830821	LENS	L-020	1	
53		BUSH	DP-187	1	
61	830807	PCB(L) UNIT	-	1	
62		LABEL, PLANKALT	YUFO-TAX	1	
63		ASS'Y, LCD	-	1	
64	830820	Scope Horn Assy	-	1	
65	830819	CABLE, FFC	-	1	
101		SCREW, CROSS PAN HEAD	M3X8	10	SW
102		SELF-LOCK SOCKET CAP	M3X10	6	
103		SELF-LOCK SOCKET CAP	M3X35	1	
104		HEXAGONAL WASHER HEAD	D4X8	2	
105		SPACER, PC	d5X3	4	
106		NUT, DOMED CAP	M3	7	

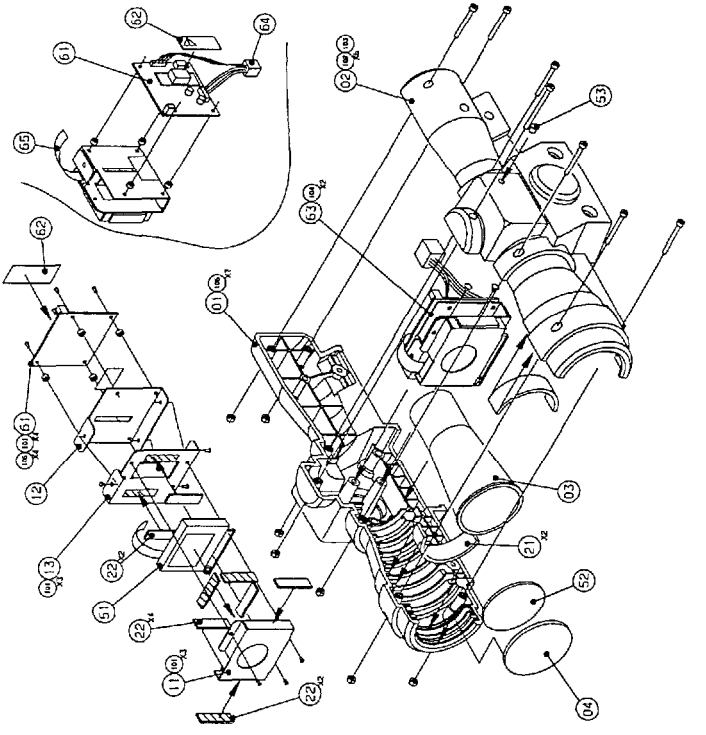

FIG.4 ASS'Y, BARREL

NO.	CODE NO.	NAME	MATERIAL/SPECIFICATION	QUANTITY	NOTE
01	830915	CASE, GRIP(L)	PC	1	
02	830916	CASE, GRIP(R)	PC	1	
03	830914	TRIGGER	PC	1	
04	830917	CASE, BARREL	PE	1	
05	830918	COVER, STOCK	PE	1	
11	830900	FRAME, GRIP	SPCC T2.3	1	
12	830911	FRAME, SCOPE	SPCC T2.3	2	
13	830909	FRAME, SCOPE	SPCC T2.3	1	
14	830910	FRAME, SCOPE	SPCC T2.3	1	
15	830908	FRAME, SCOPE	SPCC T2.3	1	
16	830907	FRAME, STOCK	SPCC T1.6	1	
17	830905	FRAME, STOCK	SPCC T1.6	1	
18	830906	FRAME, STOCK	SPCC T1.6	1	
19	830902	FRAME, GRIP	PIPE S25, SS400	1	
20	830904	FRAME, GRIP	SPCC T1.6	1	
21	830901	FRAME, BARREL	A6063TD	1	
22	830913	SPRING	SWPA D1.0	1	
31	830912	SWITCH, MICRO	SS-01L1/OMRON	1	
32	830919	Gun Barrel Horn	-	1	
101		SCREW, CROSS PAN SEMS	M4X10	27	
102		SCREW, CROSS PAN SEMS	M5X15	10	
103		SCREW, CROSS TRUSS	M4X8	26	
104		SCREW, CROSS TRUSS	M4X15	4	
105		BOLT, HEX SOCKET CAP	M4X10	1	
106		BOLT, HEX SOCKET CAP	M4X30	2	
107		BOLT, BUTTON HEAD	M5X25	2	
108		WASHER, TOOTHED LOCK	φ4	1	
109		NUT, NYLON	M5	4	
110		NUT, COPPED CAP	M4	3	
111		NUT, COPPED CAP	M5	2	

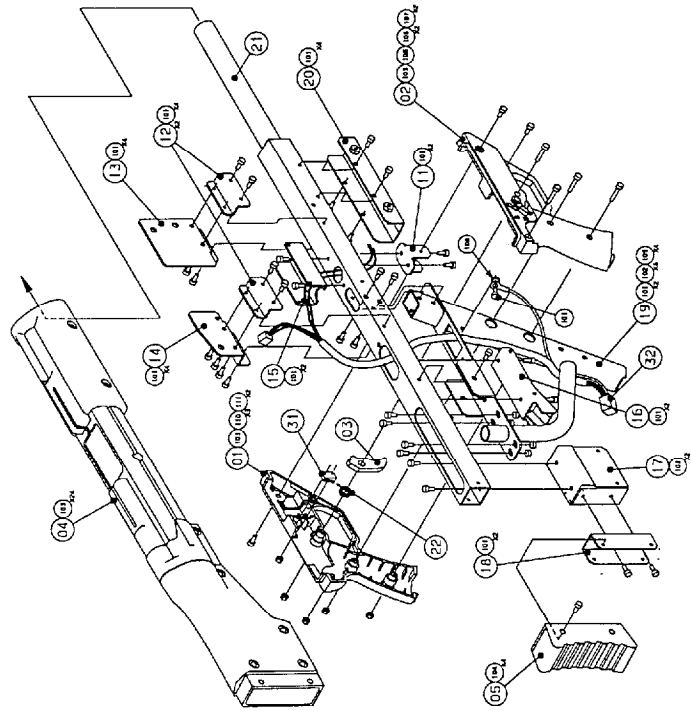

FIG.5 UNIT, MECHANISM

NO.	CODE NO.	NAME	MATERIAL/SPECIFICATION	QTY	NOTE
01		DASE	S45C/SPCC T3.2	1	
02	830953	RUBBER, STOPPER	UR H530	2	
03	830955	BRACKET, BEARING	SPCC T3.2	1	
04		GEAR	SS400	1	
05		SPACER	SS400	1	
06		GEAR	SS400	2	
07		BRACKET, P. METER	SPCC T1.6	1	
08		FRAME	SPCC T2.3	1	
09		FRAME	SPCC T2.3	1	
10	830951	PIN, STOPPER	SS400	2	
11	830952	RUBBER, STOPPER	UR H530	2	
12		SHAFT	S45C/SPCC T3.2	1	
13		GEAR	SS400	1	
14		BRACKET, P. METER	SPCC T1.6	1	
15		BRACKET, SUSPENSION	SPCC T2.3	1	
16		BRACKET, SUSPENSION	SPCC T2.3	1	
17		PLATE, MASK	SECC T1.6	1	
18		SHEET, COVER	PVC T0.5	1	
19	830008	PCB(JOINT)		1	
20	830959	WIRE	GUI2	1	
21	830960	WIRE	D_VOL	1	
22	830961	WIRE	A/D IN	1	
51	830954	STOPPER, RUBBER	RI-25	4	
52	830956	BEARING	7005	2	
53	830957	POTENTIOMETER	EVS-U0A529B53	2	
54		BUSH	R-MLCF2010	2	
55	830958	SUSPENSION, RUBBER	DR-S-15X25	1	
56		BUSH	NH-15	1	
101		BOLT, HEX SOCKET CAP	M4x10	4	SW, PW
102		BOLT, HEX SOCKET CAP	M8x18	4	
103		KEY, PARALLEL	5x5x10	2	
104		NUT, NYLON	M12	2	
105		SCREW, CROSS PAN SEMS	M3x6	6	SW, PW
106		SCREW, CROSS PAN SEMS	M6x15	14	SW, PW
107		SCREW, CROSS TRUSS	M4x6	2	
108		SCREW, HEX SOCKET SET	M4x4	4	W POINT
109		SCREW, HEX SOCKET SET	M5x8	4	W POINT
110		SPACER	BS-318	4	
111		WASHER, PLAIN	d12	2	
112		WASHER, PLAIN	d6	2	D15
113		WASHER, PLAIN	d8	4	
114		WASHER, SPRING	d8	4	
115		SCREW, CROSS PAN SEMS	M4x10	1	SW, PW

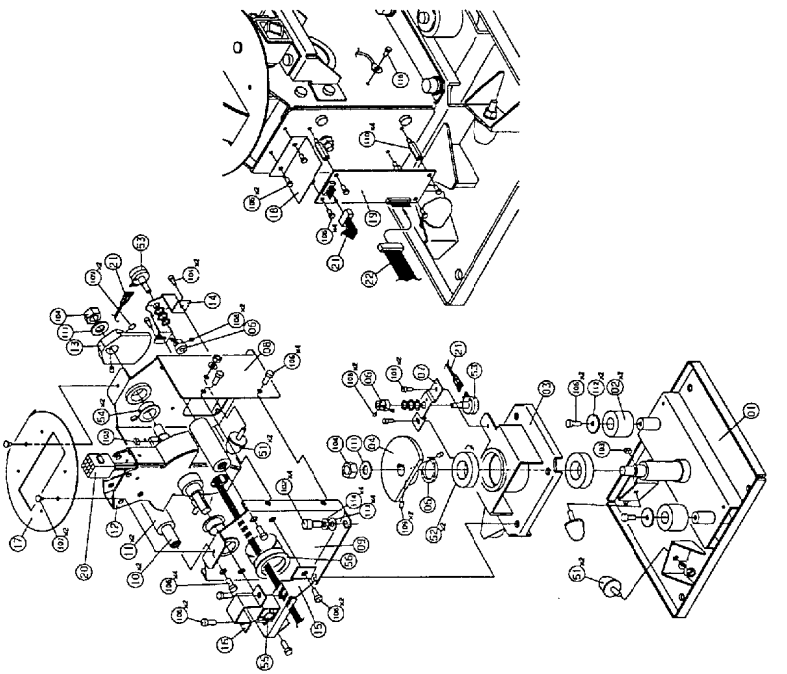
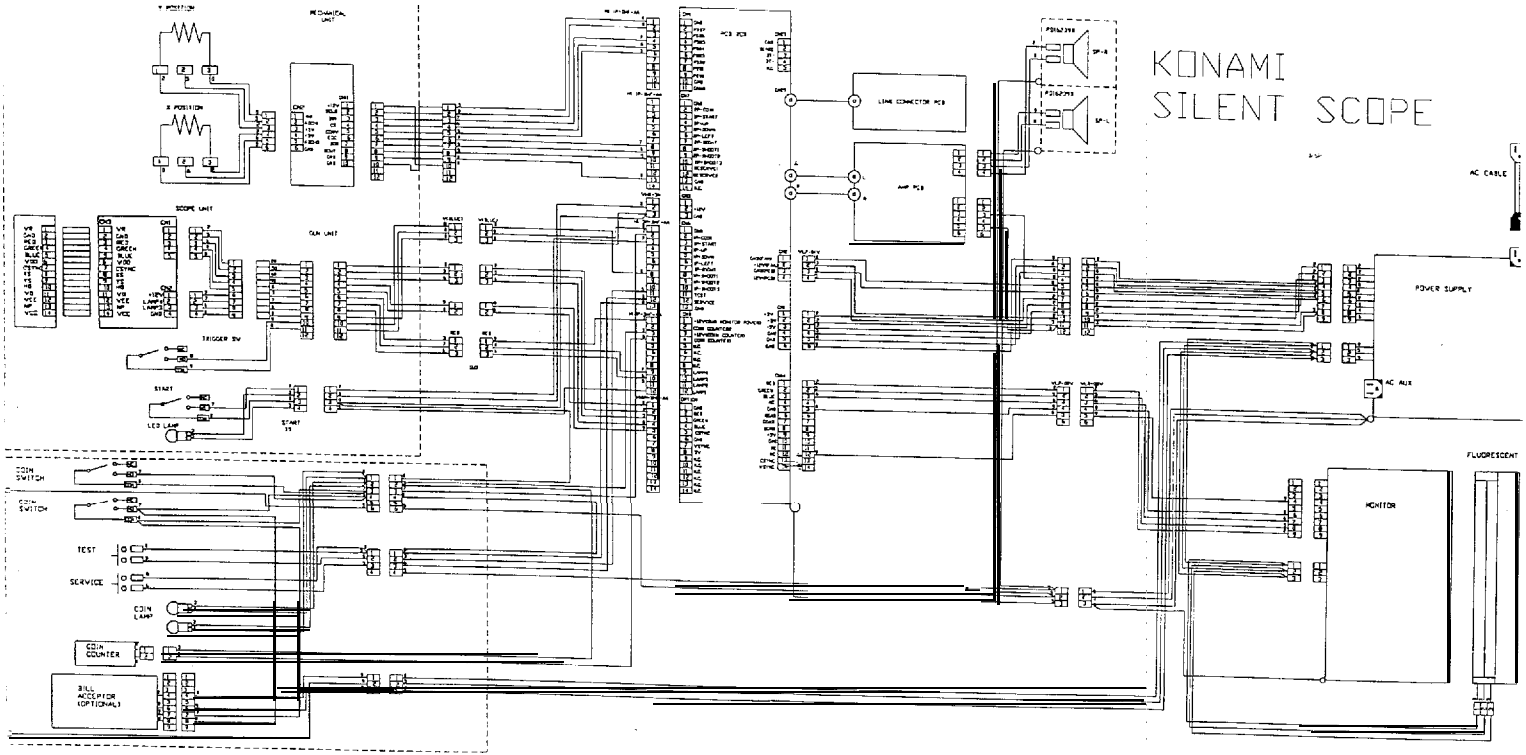
8-2 Wiring Diagram